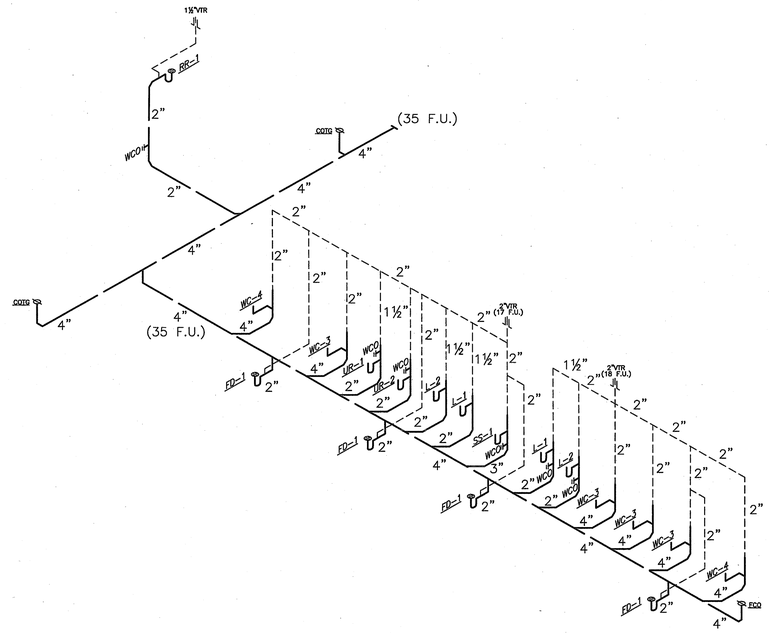

BUILDING 1 WASTE & VENT ISOMETRIC DIAGRAM — SCALE NONE — 1

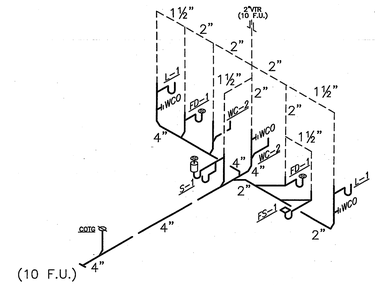

BUILDING 1 WASTE & VENT ISOMETRIC DIAGRAM — SCALE NONE — 2

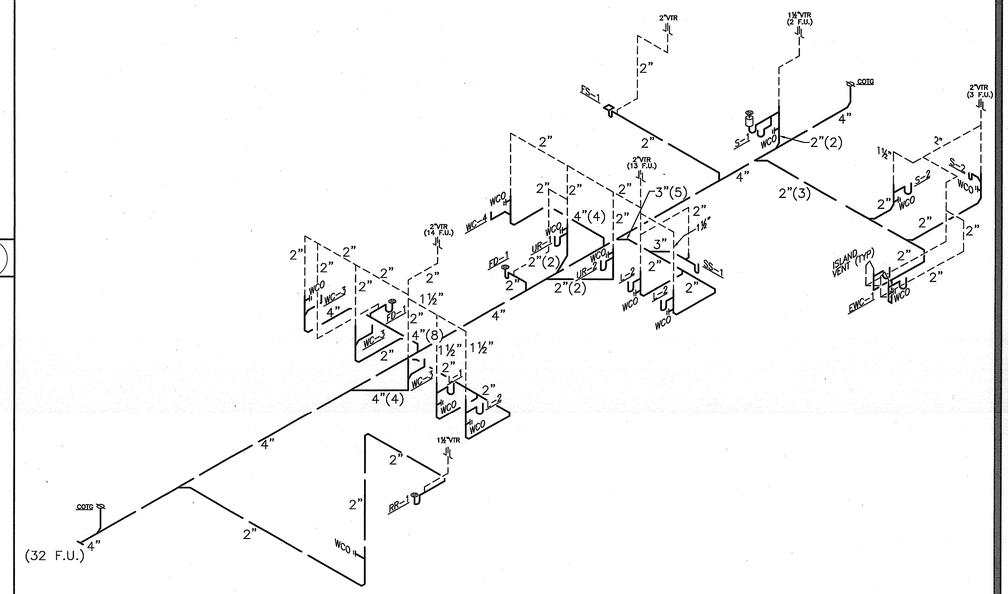

BUILDING 2 WASTE & VENT ISOMETRIC DIAGRAM — SCALE NONE — 3

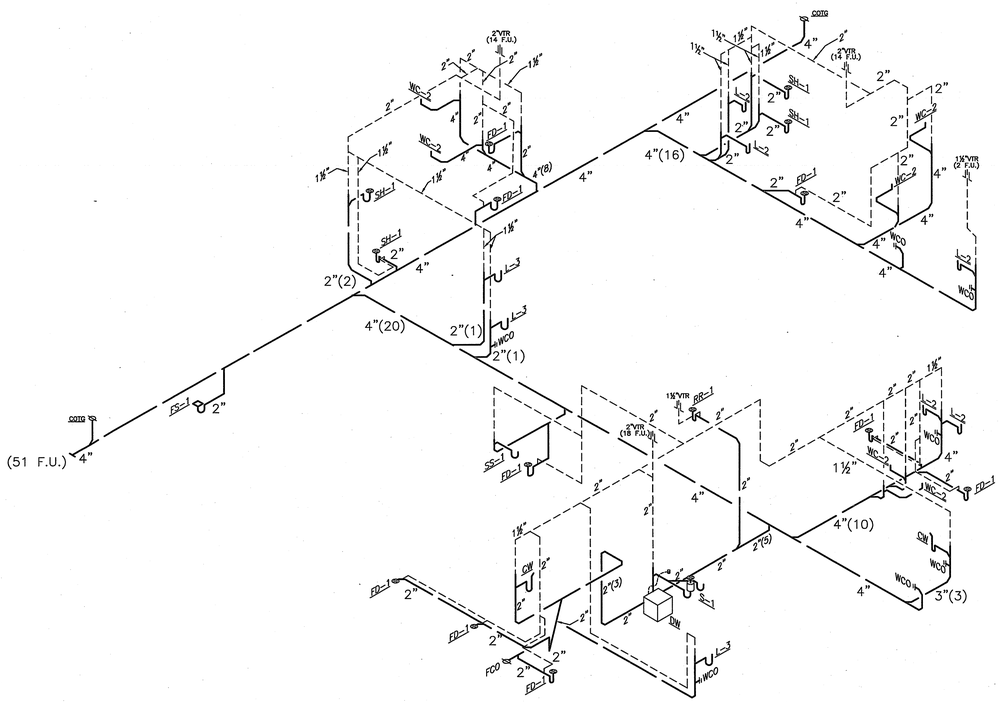

BUILDING 3 WASTE & VENT ISOMETRIC DIAGRAM — SCALE NONE — 4

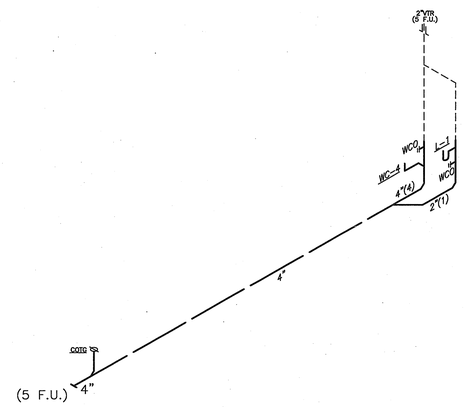

BUILDING 4&5 WASTE & VENT ISOMETRIC DIAGRAM — SCALE NONE — 5

County of Orange
OC PUBLIC WORKS
Architecture & Engineering

Revisions

Sym.	Descrip.	Date	By

0742

Consultants

FTA Engineering, Inc.
Electrical Engineers
Consulting Engineers
Lighting Consultants
Acoustical Consultants
Telecommunications Consultants
Audio Visual Consultants
Security Consultants
Fire Alarm Consultants
Energy Consultants
Sustainable Design Consultants
Commissioning Consultants
Technology Consultants
Institutional Consultants
Associate Offices
Phone 949-380-0000
Fax 949-380-0044
Web www.fta-eng.com
Irvine, CA 92606
17782 Sky Park Circle, Suite 50

Drawn. ___ Chkd. ___ Date 11-26-09

A-E Seal

A-E ALEXANDER + HIBBS, AIA, INC.
ALEXANDER + HIBBS, A.I.A. INC.
Architecture and Planning
Design CC Chkd. SA Date Nov. 26, 2009

Sht Title WASTE & VENT ISOMETRIC DIAGRAMS
Project COUNTY OF ORANGE HEALTH CARE AGENCY
401 SOUTH TUSTIN STREET
401 SOUTH TUSTIN STREET
ORANGE, CA 92866
PROJ. NO. 100-042-P210-4200

Plan No.
52333-03608

Sheet
P-5.0

0742 COUNTY OF ORANGE HEALTH CARE AGENCY 401 SOUTH TUSTIN STREET