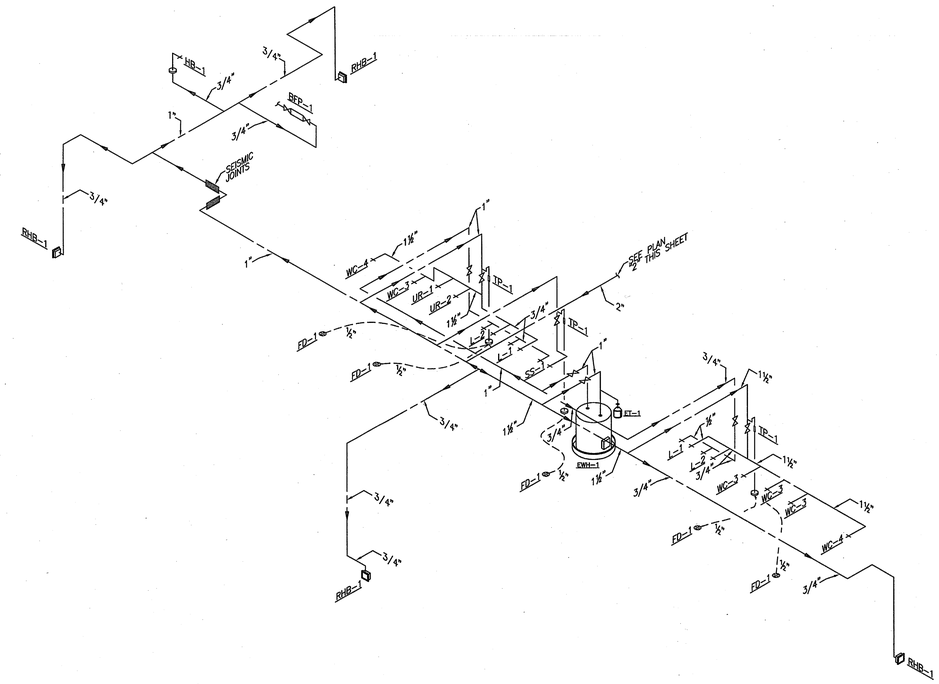

BUILDING 1 HOT & COLD WATER ISOMETRIC DIAGRAM — SCALE NONE — 1

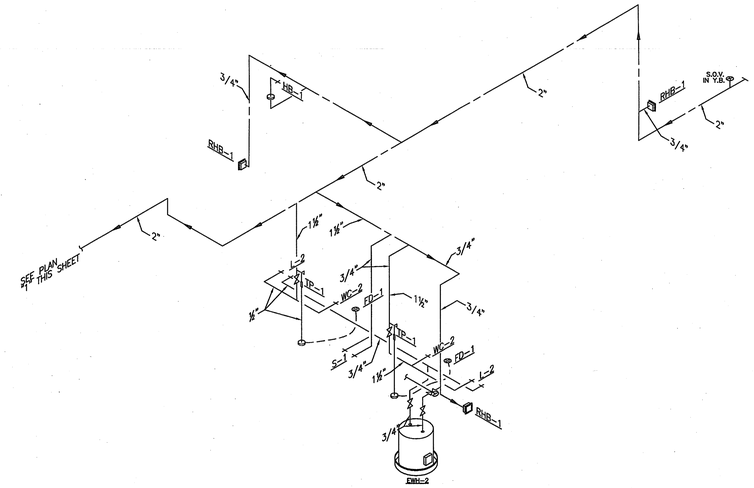

BUILDING 1 HOT & COLD WATER ISOMETRIC DIAGRAM — SCALE NONE — 2

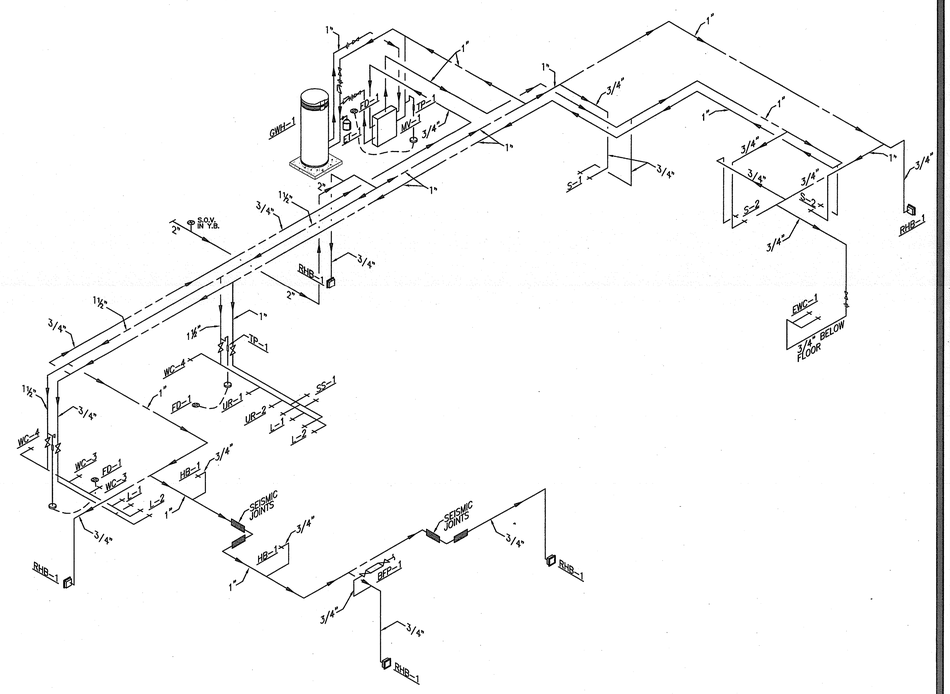

BUILDING 2 HOT & COLD WATER ISOMETRIC DIAGRAM — SCALE NONE — 3

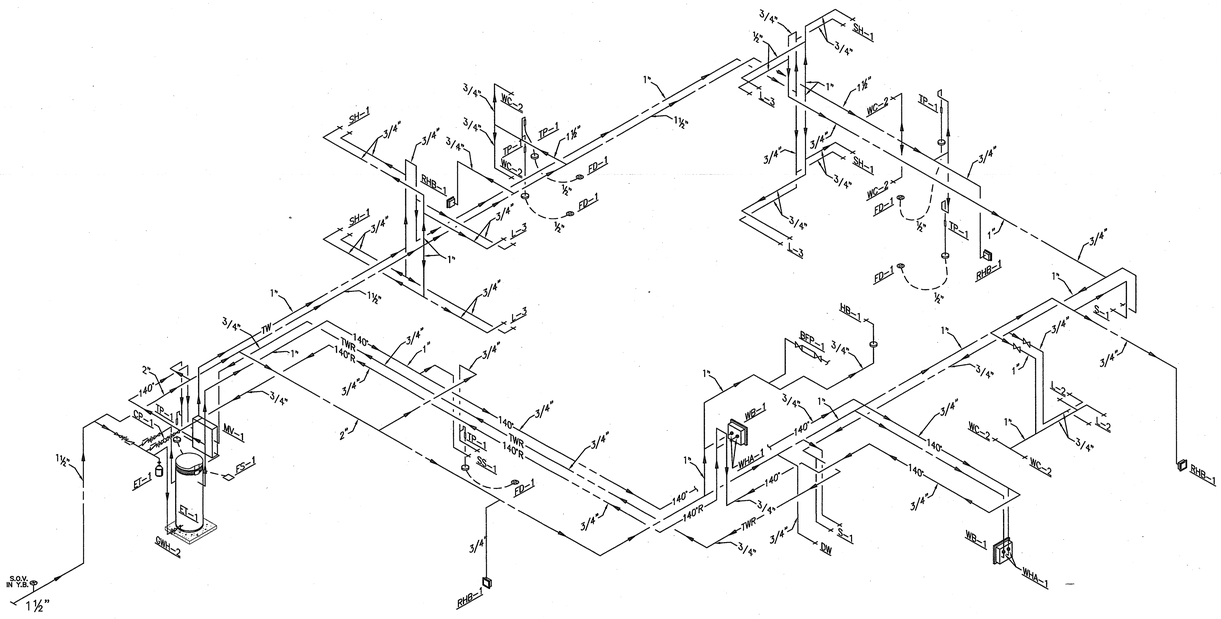

BUILDING 3 HOT & COLD WATER ISOMETRIC DIAGRAM — SCALE NONE — 4

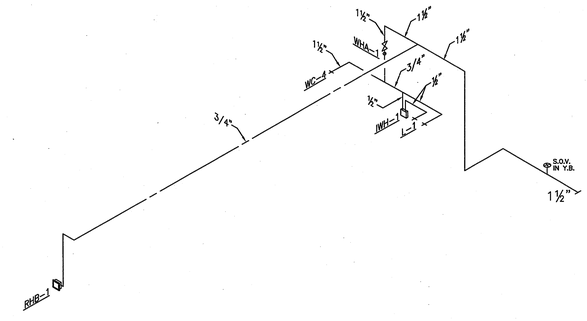

BUILDING 4 HOT & COLD WATER ISOMETRIC DIAGRAM — SCALE NONE — 5

County of Orange

OC PUBLIC WORKS — Architecture & Engineering

Sym.	Descrip.	Date	By

Revisions

0742

Consultants

FTA — Fire Protection Engineering — 2151 Michelson Drive, Suite 100, Irvine CA 92612, (949) 474-1960, Fax: 949-263-0544, www.fta-pe.com

Drawn | Chkd. | 11-26-09 Date

A-E Seal

A-E ALEXANDER + HIBBS, AIA, INC.

ALEXANDER + HIBBS, AIA, INC. — Architecture and Planning — 1111 N. Tustin Ave., Santa Ana, CA 92705

Design CC | Chkd. SA | Date Nov. 26, 2009

Sht Title HOT & COLD WATER ISOMETRIC DIAGRAMS

Project COUNTY OF ORANGE HEALTH CARE AGENCY
401 SOUTH TUSTIN STREET

401 SOUTH TUSTIN STREET
ORANGE, CA 92866

PROJ. NO. 100-042-P210-4200

Plan No. 52333-03608

Sheet P-5.1

0742 COUNTY OF ORANGE HEALTH CARE AGENCY 401 SOUTH TUSTIN STREET