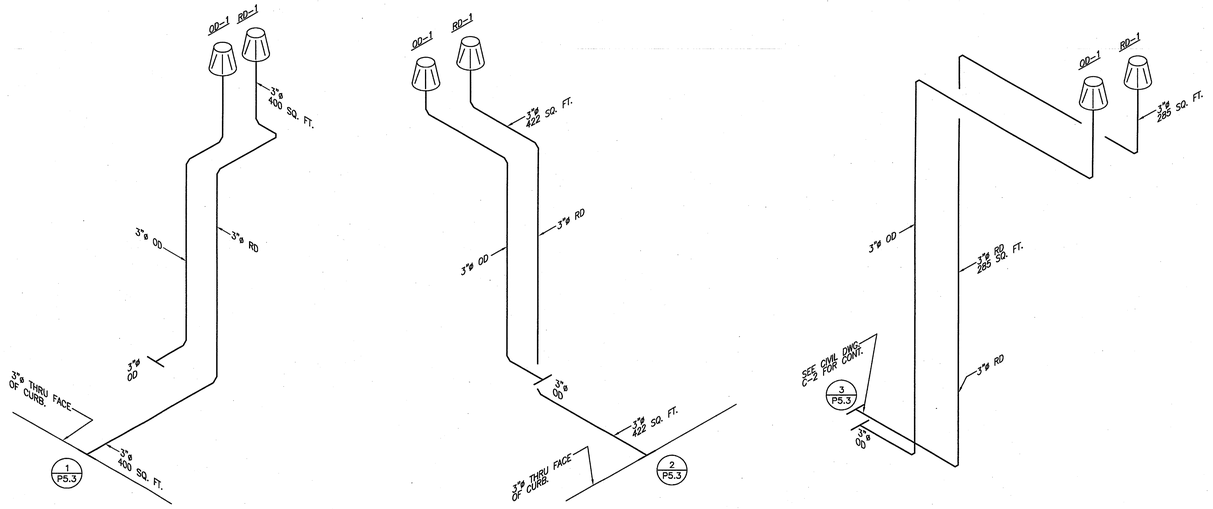

BUILDING 1 ROOF & OVERFLOW ISOMETRIC DIAGRAM — SCALE NONE

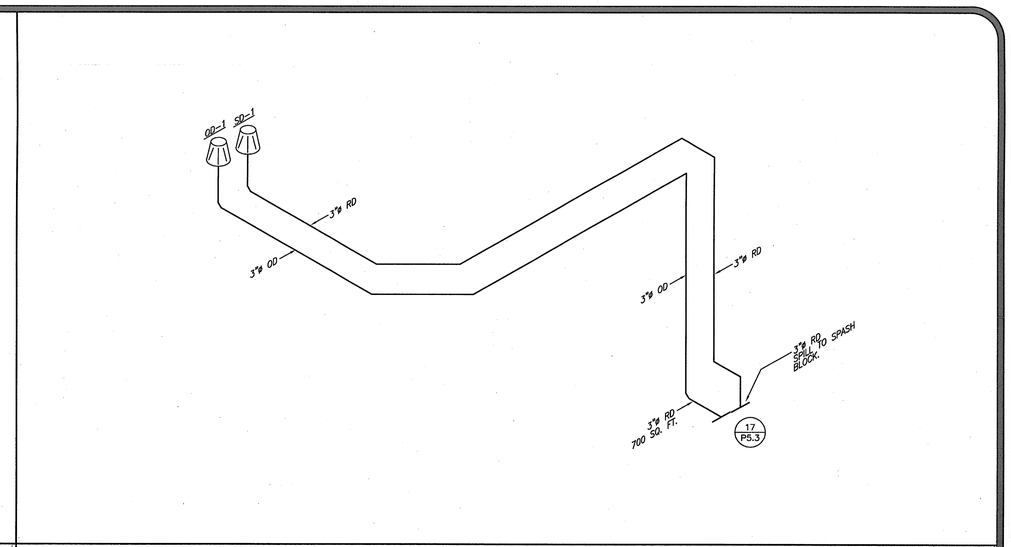

BUILDING 4&5 ROOF & OVERFLOW ISOMETRIC DIAGRAM — SCALE NONE

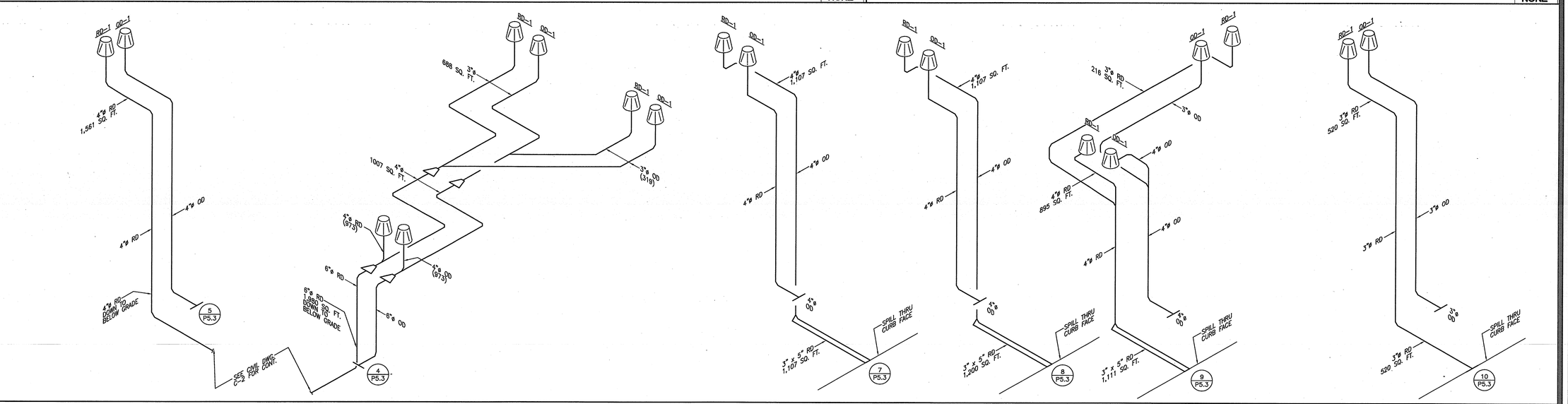

BUILDING 2 ROOF & OVERFLOW ISOMETRIC DIAGRAM — SCALE NONE

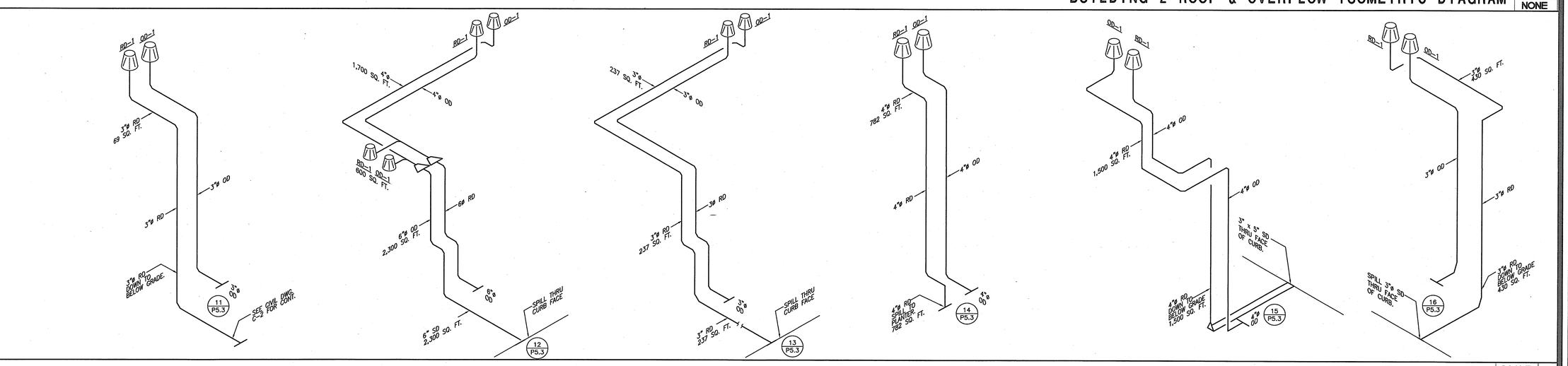

BUILDING 3 ROOF & OVERFLOW ISOMETRIC DIAGRAM — SCALE NONE

County of Orange
OC PUBLIC WORKS
Architecture & Engineering

Sym.	Descrip.	Date	By

Revisions

0742

Consultants

FTA
FT. TUSTIN ARCHITECTS
ARCHITECTS AND PLANNERS
ASSOCIATE: A&LDS
17300 MITCHELL, SUITE 60
IRVINE, CA. 92614
TEL: 714-505-9444
FAX: 714-505-9446

Drawn.	Chkd.	11-26-09 Date

A-E Seal

A-E ALEXANDER + HIBBS, AIA, INC.

ALEXANDER + HIBBS, AIA, INC.
Architecture and Planning
1111 E. Ball Road, Suite 100
Anaheim, CA 92805

Design	Chkd.	Date
CC	SA	Nov. 26, 2009

Sht Title ROOF & OVERFLOW ISOMETRIC DIAGRAMS

Project COUNTY OF ORANGE HEALTH CARE AGENCY
401 SOUTH TUSTIN STREET
401 SOUTH TUSTIN STREET
ORANGE, CA 92866

PROJ. NO. 100-042-P210-4200

Plan No.
52333-03608

Sheet
P-5.3

0742 COUNTY OF ORANGE HEALTH CARE AGENCY 401 SOUTH TUSTIN STREET