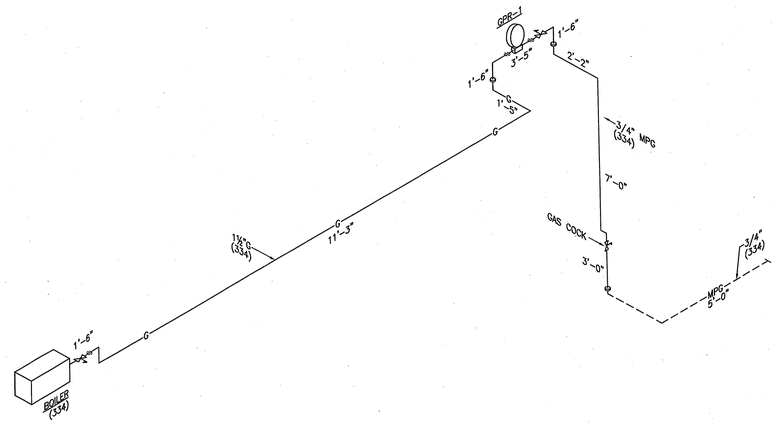

GAS DEMAND	
BOILER =	334 CFH
L.P. GAS T.D.L. =	30FT
MEDIUM PRESSURE GAS T.D.L. =	350FT

BUILDING 1 GAS ISOMETRIC DIAGRAM — SCALE NONE — 1

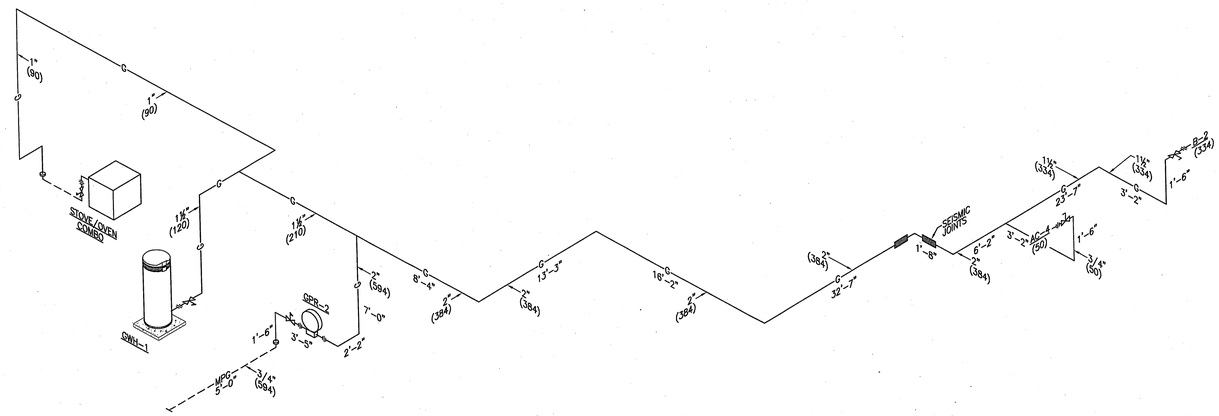

GAS DEMAND	
BOILER =	334 CFH
COOKING =	90 CFH
WATER HEATING =	120 CFH
SPACE HEATING =	50 CFH
TOTAL =	594 CFH
L.P. GAS T.D.L. =	150FT
MEDIUM PRESSURE GAS T.D.L. =	350FT

BUILDING 2 GAS ISOMETRIC DIAGRAM — SCALE NONE — 2

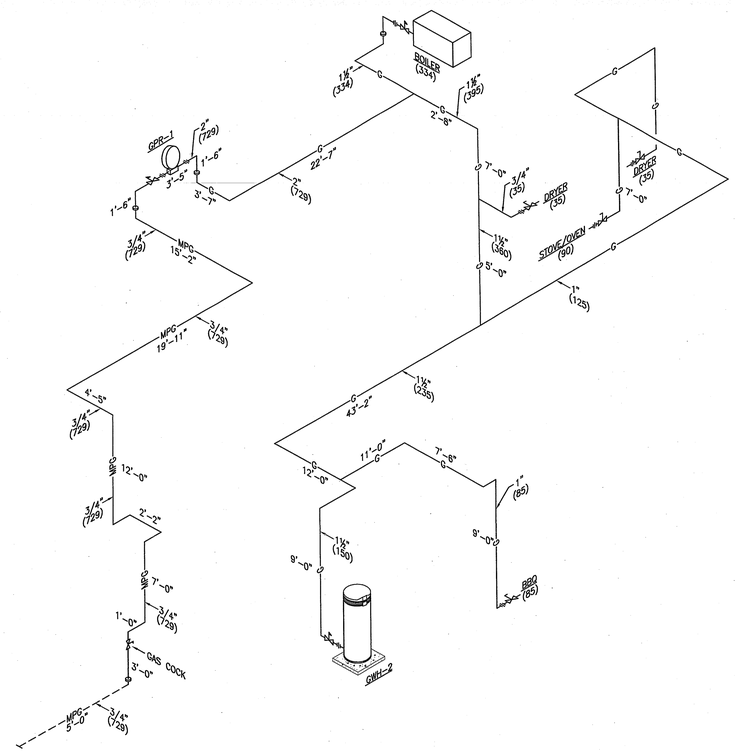

GAS DEMAND	
BOILER =	334 CFH
COOKING =	175 CFH
CLOTHES DRYER =	70 CFH
WATER HEATING =	150 CFH
TOTAL =	729 CFH
L.P. GAS T.D.L. =	125FT
MEDIUM PRESSURE GAS T.D.L. =	400FT

BUILDING 3 GAS WATER ISOMETRIC DIAGRAM — SCALE NONE — 3

County of Orange
OC PUBLIC WORKS
Architecture & Engineering

Revisions

Sym.	Descrip.	Date	By

0742

Consultants

FTA ARCHITECTS
FUTURES CONSTRUCTION GROUP, INC.
1300 SOUTH GRAND AVENUE, SUITE 150
SANTA ANA, CA 92705
TEL: 714-558-0344
FAX: 714-558-0346
Job Number: 200608

REGISTERED PROFESSIONAL ENGINEER — MICHAEL J. FINN — No. M-17 — MECHANICAL — STATE OF CALIFORNIA

Drawn	Chkd.	Date
		11-26-09

A-E Seal

A-E ALEXANDER + HIBBS, AIA, INC.

ALEXANDER + HIBBS, AIA, INC.
ARCHITECTURE and PLANNING
PROFESSIONAL ARCHITECT — STATE OF CALIFORNIA

Design	Chkd.	Date
CC	SA	Nov. 20, 2009

Sht Title GAS ISOMETRIC DIAGRAMS

Project COUNTY OF ORANGE HEALTH CARE AGENCY
401 SOUTH TUSTIN STREET
401 SOUTH TUSTIN STREET
ORANGE, CA 92866

PROJ. NO. 100-042-P210-4200

Plan No.
52333-03608

Sheet
P-5.2

0742 COUNTY OF ORANGE HEALTH CARE AGENCY 401 SOUTH TUSTIN STREET