SYSTEM NO. C-AJ-5002
(FORMERLY SYSTEM NO. 91-B)
F RATINGS – 2 AND 3 HR (SEE ITEMS 1A AND 4)
T RATINGS – 0, 1/2 AND 1 HR (SEE ITEMS 1A AND 4)
L RATING AT AMBIENT – 2 CFM/SQ FT
L RATING AT 400 F – LESS THAN 1 CFM/SQ FT

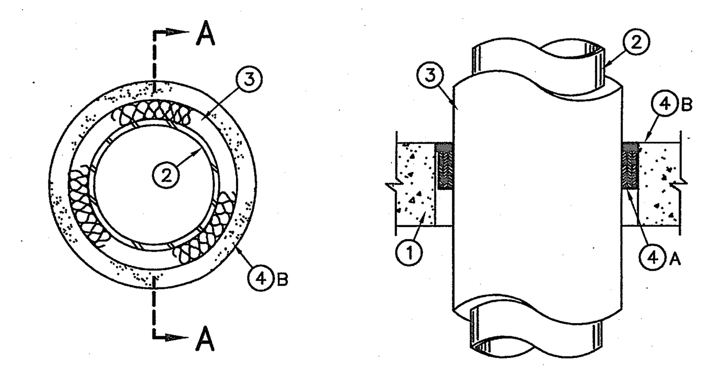

SECTION A-A

1. FLOOR OR WALL ASSEMBLY – MIN. 2-1/2 IN. THICK REINFORCED LIGHTWEIGHT OR NORMAL WEIGHT (100-150 PCF) CONCRETE. WALL MAY ALSO BE CONSTRUCTED OF ANY UL CLASSIFIED CONCRETE BLOCKS*. MAX. DIAM. OF OPENING IS 36 IN.
   SEE CONCRETE BLOCKS (CAZT) CATEGORY IN THE FIRE RESISTANCE DIRECTORY FOR NAMES OF MANUFACTURERS.

1A. STEEL SLEEVE – (OPTIONAL, NOT SHOWN) – NOM 36 IN. DIAM (OR SMALLER) SCHEDULE 10 (OR HEAVIER) STEEL PIPE SLEEVE CAST INTO MIN 4-1/2 IN. THICK CONCRETE FLOOR OR WALL. SLEEVE TO BE FLUSH WITH OR PROJECT MAX 2 IN. FROM TOP SURFACE OF FLOOR OR FROM BOTH SURFACES OF WALL. WHEN STEEL SLEEVE IS USED, F RATING IS 2 HR AND T RATING IS 0 HR.

2. PIPE – NOM 4 IN. DIAM (OR SMALLER) TYPE L (OR HEAVIER) COPPER PIPE, NOM 15 IN. DIAM (OR SMALLER) SERVICE WEIGHT (OR HEAVIER) CAST IRON SOIL PIPE NOM 30 IN. DIAM (OR SMALLER) CLASS 50 (OR HEAVIER) DUCTILE IRON PRESSURE PIPE OR NOM 30 IN. DIAM (OR SMALLER) SCHEDULE 10 (OR HEAVIER) STEEL PIPE CENTERED IN THE OPENING AND RIGIDLY SUPPORTED ON BOTH SIDES OF THE FLOOR OR WALL ASSEMBLY.

3. PIPE COVERING* – NOM 1,2 OR 3 IN. THICK HOLLOW CYLINDRICAL HEAVY DENSITY (MIN 3.5 PCF) GLASS FIBER UNITS JACKETED ON THE OUTSIDE WITH AN ALL SERVICE JACKET. LONGITUDINAL JOINTS SEALED WITH METAL FASTENERS OR ACTORY-APPLIED SELF-SEALING LAP TAPE. TRANSVERSE JOINTS SECURED WITH METAL FASTENERS OR WITH BUTT STRIP TAPE SUPPLIED WITH THE PRODUCT.
   SEE PIPE AND EQUIPMENT COVERING – MATERIALS*(BRGU) CATEGORY IN BUILDING MATERIALS DIRECTORY FOR NAMES OF MANUFACTURTERS. ANY PIPE COVERING MATERIAL MEETING THE ABOVE SPECIFICATIONS AND BEARING THE UL CLASSIFICATION MARKING WITH A FLAME SPREAD INDEX OF 25 OR LESS AND A SMOKE DEVELOPED INDEX OF 50 OR LESS MAY BE USED.

4. FIRESTOP SYSTEM – THE DETAILS OF THE FIRESTOP SYSTEM SHALL BE AS FOLLOWS:
   A. FILL, VOID OR CAVITY MATERIALS* – WRAP STRIP – NOM 1/4 IN. THICK INTUMESCENT ELASTOMERIC MATERIAL FACED ON ONE SIDE WITH ALUMINUM FOIL, SUPPLIED IN 2 IN. WIDE BY 24 IN. LONG STRIPS. NOM 2 IN. WIDE STRIPS TIGHTLY-WRAPPED AROUND PIPE COVERING (FOIL SIDE EXPOSED) TO FILL ANNULAR SPACE. EACH LAYER OF WRAP STRIP IS TO BE INSTALLED WITH A BUTTED SEAM, WITH THE BUTTED SEAMS IN SUCCESSIVE LAYERS STAGGERED. WRAP STRIP LAYERS SECURELY BOUND WITH STEEL WIRE OR ALUMINUM FOIL TAPE AND SLIDE INTO ANNULAR SPACE SUCH THAT THE TOP EDGES ARE RECESSED MIN 1/2 IN. FROM TOP SURFACE OF FLOOR. IN WALL ASSEMBLIES, THE WRAP STRIP LAYERS SHALL BE INSTALLED IN THE SAME MANNER USED FOR FLOOR ASSEMBLIES BUT SHALL BE INSTALLED SYMMETRICALLY ON BOTH SIDES OF THE WALL. THE MIN NUMBER OF WRAP STRIP LAYERS REQUIRED IS DEPENDENT UPON THE MAX PIPE. SIZE AND THE PIPE COVERING THICKNESS, AS SHOWN IN THE FOLLOWING TABLE:

MIN FLOOR OR WALL THKNS, IN	MAX PIPE DIAM, IN	NOM PIPE COVERING THKNS, IN	ANNULAR SPACE, IN	MIN NUMBER OF WRAP STRIP LAYERS	F RATING, HR	T RATING, HR
2-1/2	6	1	1/4 TO 3/8	1	2	1
2-1/2	6	2	1/2 TO 5/8	2	2	1
2-1/2	12	1	1/4 TO 3/8	1	2	1/2
4-1/2	12	1	1/4 TO 3/8	1	2	1
4-1/2	12	2	1/2 TO 5/8	2	2	1
4-1/2	20	1	1/2 TO 1	2	3	1
4-1/2	30	2	3/4 TO 1-1/4	3	2	1
4-1/2	20	3	1 TO 1-1/2	4	2	1

   MINNESOTA MINING & MFG. CO. – FS-195+
   B. FILL, VOID OR CAVITY MATERIALS* – CAULK – APPLIED TO FILL THE ANNULAR SPACE (OVER EDGES OF WRAP STRIP LAYERS) TO A MIN DEPTH OF 1/2 IN, FLUSH WITH TOP SURFACE OF FLOOR OR BOTH SURFACES OF WALL.
   MINNESOTA MINING & MFG. CO. – CP 25WB+

*BEARING THE UL CLASSIFICATION MARKING

SYSTEM NO. C-AJ-1116
(FORMERLY SYSTEM NO. 599)
F RATING – 3 HR
T RATING – 0 HR

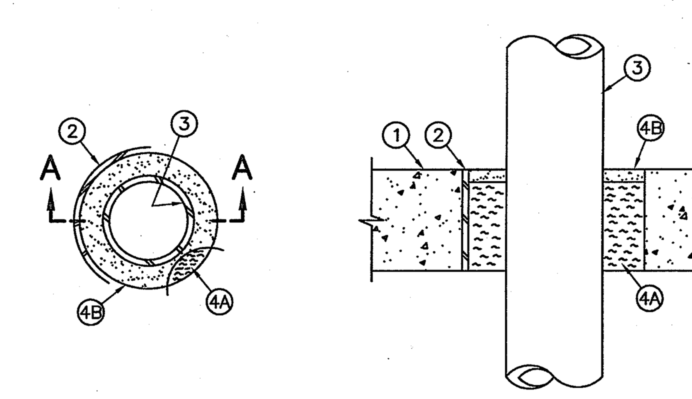

SECTION A-A

1. FLOOR OR WALL ASSEMBLY – MIN. 4-1/2 IN. THICK REINFORCED LIGHTWEIGHT OR NORMAL WEIGHT (100-150 PCF) CONCRETE. WALL MAY ALSO BE CONSTRUCTED OF ANY UL CLASSIFIED CONCRETE BLOCKS*. MAX. DIAM. OF OPENING IS 6-5/8 IN.
   SEE CONCRETE BLOCKS (CAZT) CATEGORY IN THE FIRE RESISTANCE DIRECTORY FOR NAMES OF MANUFACTURERS.
2. METALLIC SLEEVE – (OPTIONAL) – NOM. 6 IN. DIAM. (OR SMALLER) SCHEDULE 40 STEEL PIPE CAST OR GROUTED INTO FLOOR OR WALL ASSEMBLY, FLUSH WITH FLOOR OR WALL SURFACES
3. THROUGH PENETRANTS – ONE METALLIC PIPE OR TUBING TO BE CENTERED WITHIN THE FIRESTOP SYSTEM. PIPE OR TUBING TO BE RIGIDLY SUPPORTED ON BOTH SIDES OR FLOOR OR WALL ASSEMBLY. THE ANNULAR SPACE WITHIN THE FIRESTOP SYSTEM SHALL BE A NOM 3/4 IN. THE FOLLOWING TYPES AND SIZES OF METALLIC PIPES OR TUBING MAY BE USED.
   A. STEEL PIPE – NOM 3 IN. DIAM (OR SMALLER) SCHEDULE 5 (OR HEAVIER) STEEL PIPE.
   B. IRON PIPE – NOM 3 IN. DIAM (OR SMALLER) CAST OR DUCTILE IRON PIPE.
   C. CONDUIT – NOM 4 IN. DIAM (OR SMALLER) STEEL ELECTRICAL METALLIC TUBING OR STEEL CONDUIT.
   D. COPPER TUBING – NOM 3 IN. DIAM (OR SMALLER) TYPE L (OR HEAVIER) COPPER TUBING.
   E. COPPER PIPE – NOM 3 IN. DIAM (OR SMALLER) REGULAR (OR HEAVIER) COPPER PIPE.
4. FIRESTOP SYSTEM – THE FIRESTOP SYSTEM SHALL CONSIST OF THE FOLLOWING:
   A. PACKING MATERIAL – MIN 4 IN. THICKNESS OF MIN PCF MINERAL WOOL BATT INSULATION FIRMLY PACKED INTO OPENING AS A PERMANENT FORM. PACKING MATERIAL TO BE RECESSED FROM TOP SURFACE OF FLOOR OR FROM BOTH SURFACES OF WALL AS REQUIRED TO ACCOMMODATE THE REQUIRED THICKNESS OF FILL MATERIAL.
   B. FILL, VOID OR CAVITY MATERIAL* – CAULK – MIN 1/2 IN. THICKNESS OF FILL MATERIAL APPLIED WITHIN THE ANNULUS, FLUSH WITH TOP SURFACE OF FLOOR OR WITH BOTH SURFACES OF WALL.
   A/D FIRE PROTECTION SYSTEMS INC. – A/D SILICONE FIREBARRIER SEALANT [S/L (FLOORS ONLY) OR G/G (FLOOR OR WALLS)].

*BEARING THE UL CLASSIFICATION MARKING.

MASONERY WALL PENETRATION DETAIL

SCALE NONE 7

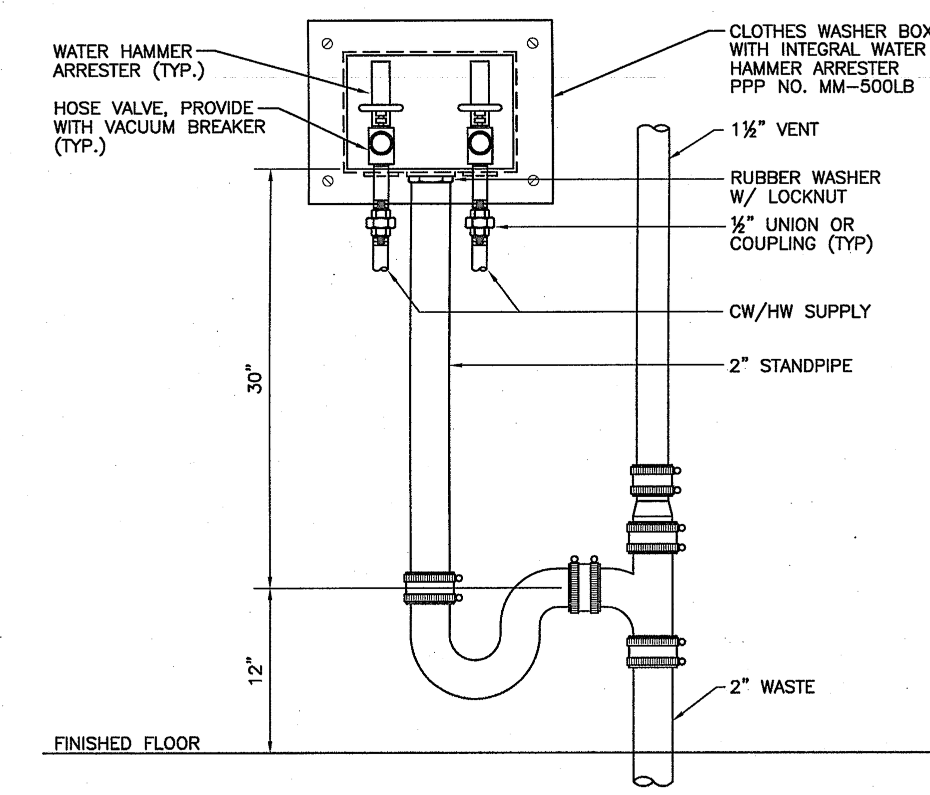

WASHER BOX DETAIL

SCALE NONE 4

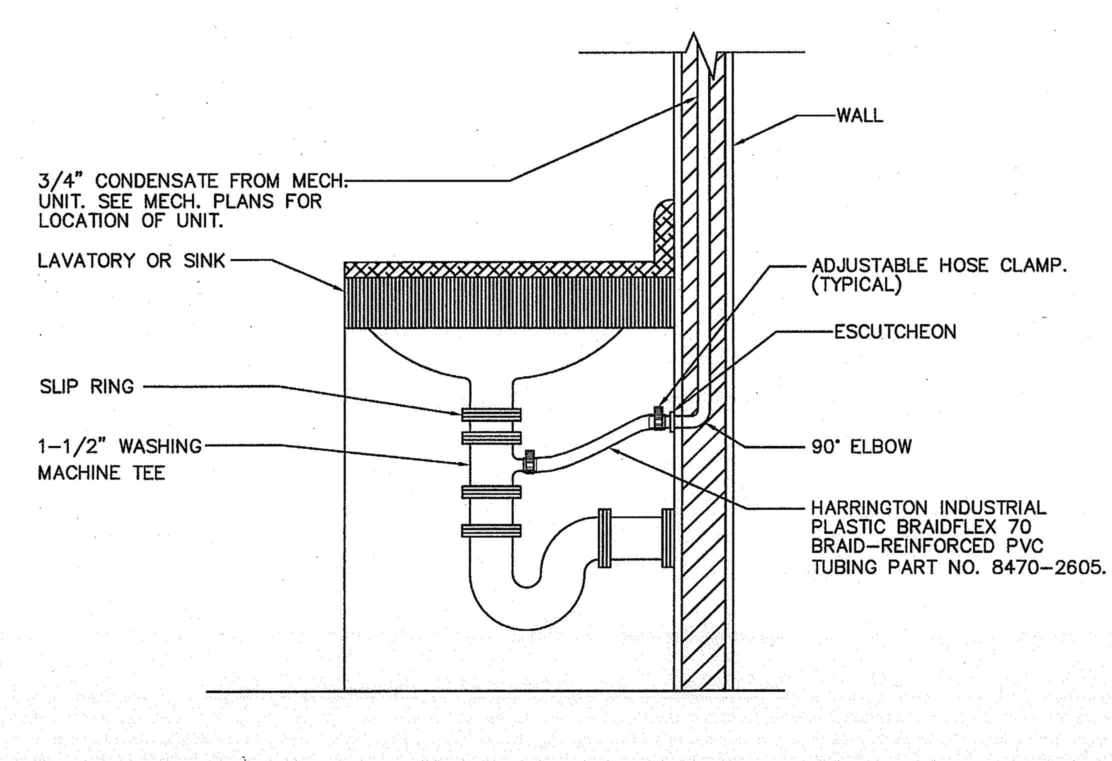

CONDENSATE TO LAV. TAILPIECE DETAIL

SCALE NONE 5

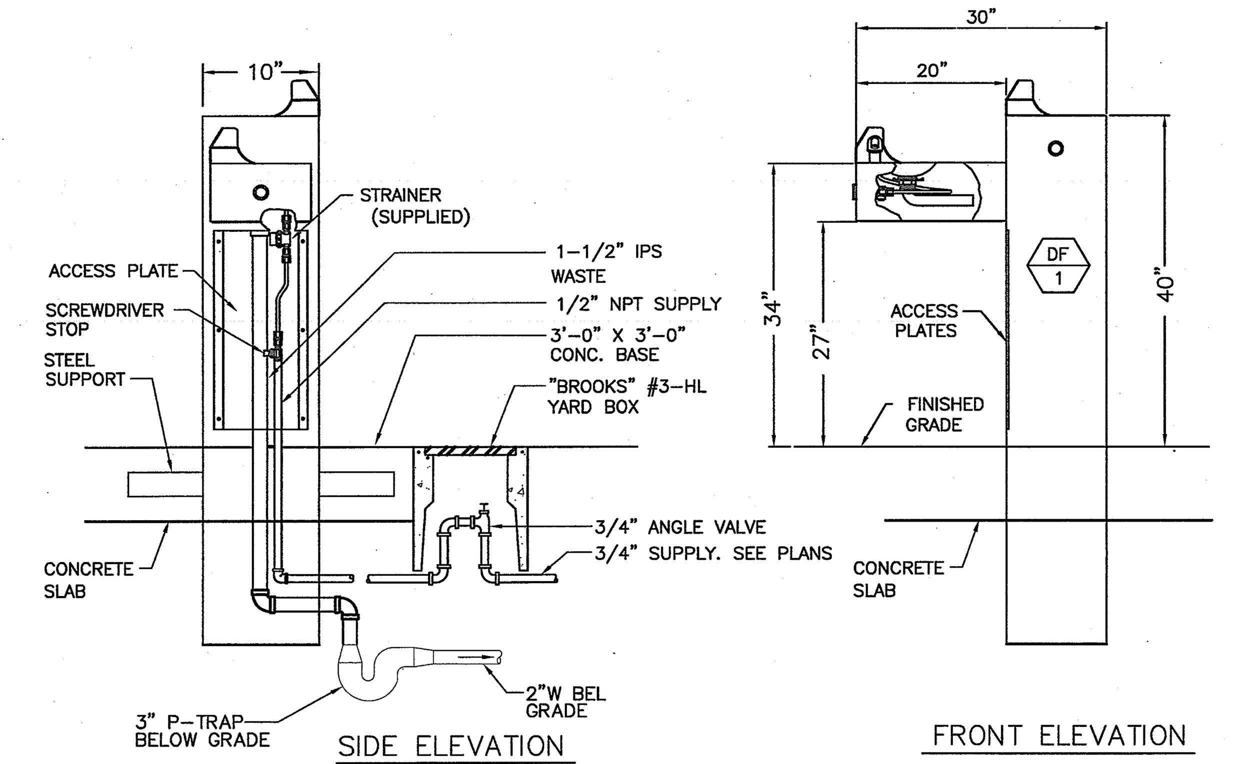

ADA PEDESTAL DRINKING FOUNTAIN DETAIL

SCALE NONE 6

SEISMIC CONNECTOR L-LOOP COPPER SWEAT
ALLOWABLE MOVEMENT +/- 4" IN ALL PLANES

ME PRODUCTS MODEL NO.	PIPE SIZE	OAL (IN.)	L L (IN.)	OPER. PRESS.	SPRING (1) FORCE LBS.
L-41SB4-050	1/2"	18.75	16.00	487	34
L-41SB4-075	3/4"	22.50	18.75	572	40
L-41SB4-100	1"	24.00	19.50	267	44
L-41SB4-125	1¼"	27.50	22.00	243	65
L-41SB4-150	1½"	29.50	23.50	251	70
L-41SB4-200	2"	33.00	26.00	167	80
L-41SB4-250	2½"	28.00	20.00	570	86
L-41SB4-300	3"	31.00	22.50	450	93
L-41SB4-400	4"	35.00	25.00	285	127

(A)	FEMALE COPPER SWEAT
(B)	BRONZE HOSE AND BRAID
(C)	COPPER 90 DEGREE ELBOW

(1) SPRING FORCE CALCULATED AT 150 PSI

CONTACT: ME PRODUCTS COMPANY
PHONE: (760)918-0125
www.meproductsco.com

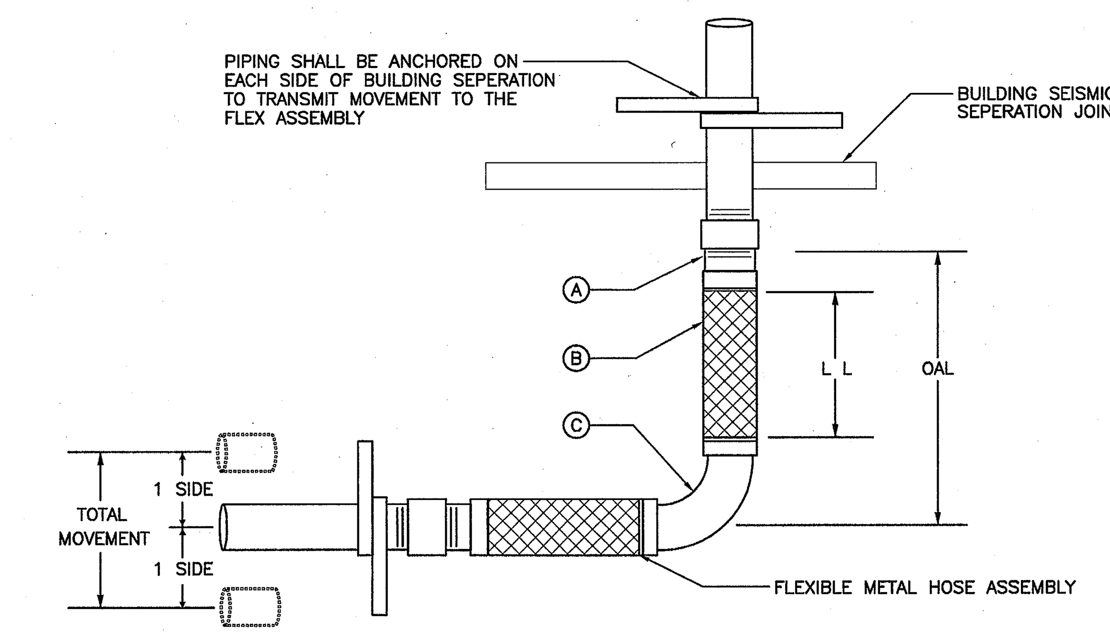

H AND CW SEISMIC JOINT DETAIL

SCALE NONE 1

SEISMIC CONNECTOR DOG-LEG "L" CSA MALE PIPE THREAD
ALLOWABLE MOVEMENT +/- 4" IN ALL PLANES

MODEL NO.	PIPE SIZE	OAL (3)(IN.)	L (IN.)	OPER. PRESS.	BURST	SPRING (4) FORCE LBS.
L-SF21CSA-050-4040-16"LL	1/2"	20.00	16.00	150	5340	35
L-SF21CSA-075-4040-17"LL	3/4"	21.75	17.00	150	4540	41
L-SF21CSA-100-4040-18"LL	1"	22.75	18.00	150	3180	45
L-SF21CSA-125-4040-23"LL	1¼"	28.50	23.00	150	2240	64
L-SF21CSA-150-4040-24"LL	1½"	29.75	24.00	150	2120	75
L-SF21CSA-200-4040-25"LL	2"	32.00	25.00	150	2140	82
L-SF21CSA-250-4040-29"LL	2½"	37.75	29.00	150	2140	86
L-SF21CSA-300-4040-30"LL	3"	39.50	30.00	150	1540	93
L-SF21CSA-400-4040-32"LL	4"	44.00	32.00	150	1080	127

(3) OAL IS APPROXIMATE DUE TO FITTING TOLERANCES
(4) APPROX. SPRING FORCE CALCULATED AT 150 PSI.

(A)	S40 STEEL MPT PIPE NIPPLE
(B)	T300 SERIES S.S. HOSE AND BRAID
(C)	S40 STEEL 90 DEGREE ELBOW

CERTIFIED (1) BY CSA INTERNATIONAL (2) FOR USE ON GAS PIPE LINES, CERTIFICATION REPORT NO. 190623-1131571 UNISOURCE MFG.

CONTACT: ME PRODUCTS COMPANY
PHONE: (760)918-0125
www.meproductsco.com

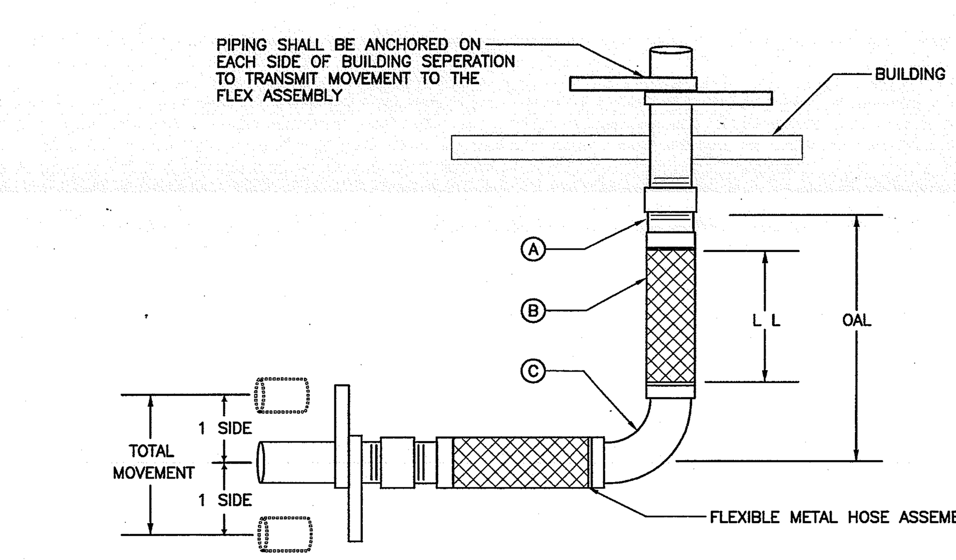

(1) APPLICABLE REQUIREMENTS ANSI/UL 536-1997 STANDARDS FOR FLEXIBLE METAL HOSE.
(2) CSA INTERNATIONAL IS THE CURREN CERTIFICATION AGENCY FOR GAS INDUSTRY PRODUCTS IN NORTH AMERICA ASSUMING THE AUTHORITY FORMERLY ASSOCIATED WITH THE (AGA).

GAS PIPING SEISMIC JOINT DETAIL

SCALE NONE 2

SYSTEM NO. W-L-1001
(FORMERLY SYSTEM NO. 147)
F RATINGS – 1, 2, 3 AND 4 HR (SEE ITEMS 2 AND 3)
T RATINGS – 0, 1, 2, 3, AND 4 HR (SEE ITEM 3)
L RATING AT AMBIENT – LESS THAN 1 CFM/SQ FT
L RATING AT 400 F – LESS THAN 1 CFM/SQ FT

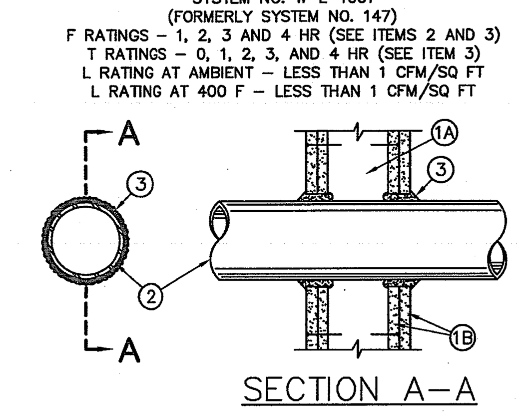

SECTION A-A

1. WALL ASSEMBLY – THE 1, 2, 3 OR 4 HR FIRE-RATED GYPSUM WALLBOARD/STUD WALL ASSEMBLY SHALL BE CONSTRUCTED OF THE MATERIALS AND IN THE MANNER DESCRIBED IN THE INDIVIDUAL U300 OR U400 SERIES WALL OR PARTITION DESIGNS IN THE UL FIRE RESISTANCE DIRECTORY AND SHALL INCLUDE THE FOLLOWING CONSTRUCTION FEATURES.
   A. STUDS – WALL FRAMING MAY CONSIST OF EITHER WOOD STUDS (MAX 2 HR FIRE RATED ASSEMBLIES) OR STEEL CHANNEL STUDS. WOOD STUDS TO CONSIST OF NOM 2 BY 4 IN. LUMBER SPACED 16 IN. O.C. WITH NOM 2 BY 4 IN. LUMBER END PLATES AND CROSS BRACES. STEEL STUDS TO BE MIN 3-5/8 IN. WIDE BY 1-3/8 IN. DEEP CHANNELS SPACED MAX 24 IN. O.C.
   B. WALLBOARD, GYPSUM* – NOM 1/2 IN. OR 5/8 IN. THICK, 4 FT WIDE WITH SQUARE OR TAPERED EDGES. THE GYPSUM WALLBOARD TYPE, THICKNESS, NUMBER OF LAYERS, FASTENER TYPE AND SHEET ORIENTATION SHALL BE AS SPECIFIED IN THE INDIVIDUAL U300 OR U400 SERIES DESIGN IN THE UL FIRE RESISTANCE DIRECTORY. MAX DIAM OPENING IS 13-1/2 IN.
2. PIPE OR CONDUIT – NOM 12 IN. DIAM (OR SMALLER) SCHEDULE 10 (OR HEAVIER) STEEL PIPE, NOM 12 IN. DIAM (OR SMALLER) SERVICE WEIGHT (OR HEAVIER) CAST IRON SOIL PIPE, NOM 12 IN. DIAM (OR SMALLER) CLASS 50 (OR HEAVIER) DUCTILE IRON PRESSURE PIPE, NOM 6 IN. DIAM (OR SMALLER) STEEL CONDUIT, NOM 4 IN. DIAM (OR SMALLER) STEEL ELECTRICAL METALLIC TUBING, NOM 6 IN. DIAM (OR SMALLER) TYPE L (OR HEAVIER) COPPER TUBING OR NOM 1 IN. DIAM (OR SMALLER) FLEXIBLE STEEL CONDUIT. WHEN COPPER PIPE IS USED, MAX F RATING OF FIRESTOP SYSTEM (ITEM 3) IS 2 H. STEEL PIPES OR CONDUITS LARGER THAN NOM 4 IN. DIAM MAY ONLY BE USED IN WALLS CONSTRUCTED USING STEEL CHANNEL STUDS. A MAX OF ONE PIPE OR CONDUIT IS PERMITTED IN THE FIRESTOP SYSTEM. PIPE OR CONDUIT TO BE INSTALLED NEAR CENTER OF STUD CAVITY WIDTH AND TO BE RIGIDLY SUPPORTED ON BOTH SIDES OF WALL ASSEMBLY.
3. FILL, VOID OR CAVITY MATERIAL* – CAULK – CAULK FILL MATERIAL INSTALLED TO COMPLETELY FILL ANNULAR SPACE BETWEEN PIPE OR CONDUIT AND GYPSUM WALLBOARD AND WITH A MIN 1/4 IN. DIAM BEAD OF CAULK APPLIED TO PERIMETER OF PIPE OR CONDUIT AT ITS EGRESS FROM THE WALL. CAULK INSTALLED SYMMETRICALLY ON BOTH SIDES OF WALL ASSEMBLY. THE HOURLY F RATING OF THE FIRESTOP SYSTEM IS DEPENDENT UPON HOURLY FIRE RATING OF THE WALL ASSEMBLY IN WHICH IT IS INSTALLED, AS SHOWN IN THE FOLLOWING TABLE. THE HOURLY T RATING OF THE FIRESTOP SYSTEM IS DEPENDENT UPON THE TYPE OR THE SIZE OF THE PIPE OR CONDUIT AND THE HOURLY FIRE RATING OF THE WALL ASSEMBLY IN WHICH IT IS INSTALLED, AS TABULATED BELOW:

MAX PIPE OR CONDUIT DIAM, IN	ANNULAR SPACE, IN	F RATING, HR	T RATING, HR
1	0 TO 3/16	1 OR 2	0+, 1 OR 2
1	1/4 TO 1/2	3 OR 4	3 OR 4
4	0 TO 1/4	1 OR 2	0
4	0 TO 1-1/2#	1 OR 2	0
6	1/4 TO 1/2	3 OR 4	0
12	3/16 TO 3/8	1 OR 2	0

+WHEN COPPER PIPE IS USED, T RATING IS 0 H.
#0 TO 1-1/2 IN. ANNULAR SPACE APPLIES ONLY WHEN TYPE CP-25 WB+ CAULK IS USED AND ONLY WHEN THE MIN THICKNESS OF THE GYPSUM WALLBOARD IS 5/8 IN. FOR I HR. RATED WALLS AND 1-1/4 IN. FOR 2 HR RATED WALLS.
MINNESOTA MINING & MFG. CO. – CP 25WB+
*BEARING THE UL CLASSIFICATION MARKING

SYSTEM NO. W-L-5039
F RATINGS – 1 AND 2 HR (SEE ITEM 1)
T RATINGS – 3/4, 1 AND 1-1/2 HR (SEE ITEM 3)

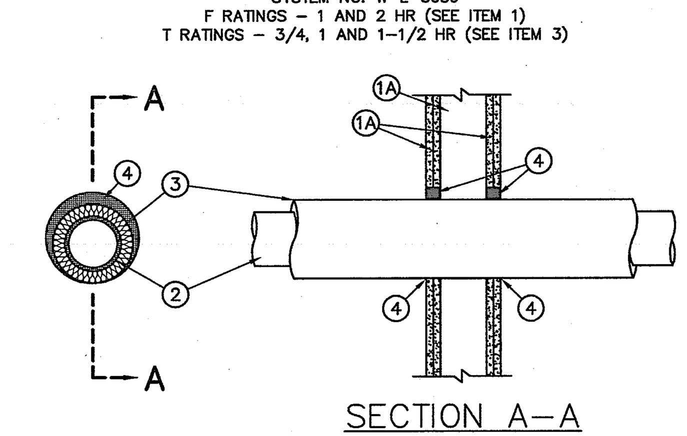

SECTION A-A

1. WALL ASSEMBLY – THE 1 OR 2 HR FIRE-RATED GYPSUM WALLBOARD/STUD WALL ASSEMBLY SHALL BE CONSTRUCTED OF THE MATERIALS AND IN THE MANNER SPECIFIED IN THE INDIVIDUAL U300 OR U400 SERIES WALL OR PARTITION DESIGNS IN THE UL FIRE RESISTANCE DIRECTORY AND SHALL INCLUDE THE FOLLOWING CONSTRUCTION FEATURES.
   A. STUDS – WALL FRAMING MAY CONSIST OF EITHER WOOD STUDS OR STEEL CHANNEL STUDS. WOOD STUDS TO CONSIST OF NOM 2 BY 4 IN. LUMBER SPACED 16 IN. OC. STEEL STUDS TO BE MIN 3-5/8 IN. WIDE AND SPACED MAX 24 IN. OC.
   B. WALLBOARD, GYPSUM* – NOM 5/8 IN. THICK, 4 FT WIDE WITH SQUARE OR TAPERED EDGES. THE GYPSUM WALLBOARD TYPE, NUMBER OF LAYERS, FASTENER TYPE AND SHEET ORIENTATION SHALL BE AS SPECIFIED IN THE INDIVIDUAL WALL AND PARTITION DESIGN. DIAM OF OPENING IN WALLBOARD LAYERS TO BE 1 IN. LARGER THAN OUTSIDE DIAM OF PIPE COVERING (ITEM 3). MAX DIAM OF OPENING IN WALLBOARD LAYERS IS 8-1/2 IN.
   THE HOURLY F RATING OF THE FIRESTOP SYSTEM IS EQUAL TO THE HOURLY FIRE RATING OF THE WALL ASSEMBLY.
2. METALLIC PIPE – NOM 4 IN. DIAM (OR SMALLER) SCHEDULE 10 (OR HEAVIER) STEEL PIPE OR TYPE L (OR HEAVIER) COPPER TUBE. ONE PIPE TO BE INSTALLED EITHER CONCENTRICALLY OR ECCENTRICALLY WITHIN THE FIRESTOP SYSTEM. PIPE TO BE RIGIDLY SUPPORTED ON BOTH SIDES OF WALL ASSEMBLY.
3. PIPE COVERING* – NOM 1/2 TO 1-1/2 IN. THICK HOLLOW CYLINDRICAL HEAVY DENSITY (MIN 3.5 PCF) GLASS FIBER UNITS JACKETED ON THE OUTSIDE WITH AN ALL SERVICE JACKET. LONGITUDINAL JOINTS SEALED WITH METAL FASTENERS OR FACTORY-APPLIED SSL TAPE. TRANSVERSE JOINTS SECURED WITH METAL FASTENERS OR WITH BUTT TAPE SUPPLIED WITH THE PRODUCT. THE ANNULAR SPACE BETWEEN THE INSULATED PIPE AND THE EDGE OF THE THROUGH OPENING SHALL BE MIN ZERO IN. (CONTINUOUS POINT CONTACT) TO MAX 1-1/4 IN.
   THE HOURLY T RATING IS 0 HR WHEN PIPE COVERING LESS THAN NOM 1-1/2 IN. THICK IS USED. WHEN 1-1/2 IN. THICK PIPE COVERING IS USED, THE HOURLY T RATING IS 1 HR WHEN INSTALLED IN 1 HR RATED WALLS. WHEN 1-1/2 IN. THICK PIPE COVERING IS USED IN 2 HR RATED WALL, THE T RATING IS 1 HR WHEN COPPER TUBE IS USED AND 1-1/2 HR WHEN STEEL PIPE IS USED.
   SEE PIPE AND EQUIPMENT COVERING – MATERIALS (BRGU) CATEGORY IN THE BUILDING MATERIALS DIRECTORY FOR NAMES OF MANUFACTURERS. ANY PIPE COVERING MATERIAL MEETING THE ABOVE SPECIFICATIONS AND BEARING THE UL CLASSIFICATION MARKING WITH A FLAME SPREAD INDEX OF 25 OR LESS AND A SMOKE DEVELOPED INDEX OF 50 OR LESS MAY BE USED.
4. FILL, VOID OR CAVITY MATERIALS – CAULK – INSTALLED TO FILL ANNULAR SPACE THROUGHOUT THICKNESS OF GYPSUM WALLBOARD LAYERS, FLUSH WITH EACH SURFACE OF WALL. A MIN 1/2 IN. DIAM BEAD OF CAULK SHALL BE APPLIED TO THE PIPE INSULATION/WALLBOARD INTERFACE AT THE POINT CONTACT LOCATION ON BOTH SIDES OF WALL.
   MINNESOTA MINING & MFG. CO. – TYPE CP 25WB+

*BEARING THE UL CLASSIFICATION MARKING.

STUD WALL PENETRATION DETAIL

SCALE NONE 8

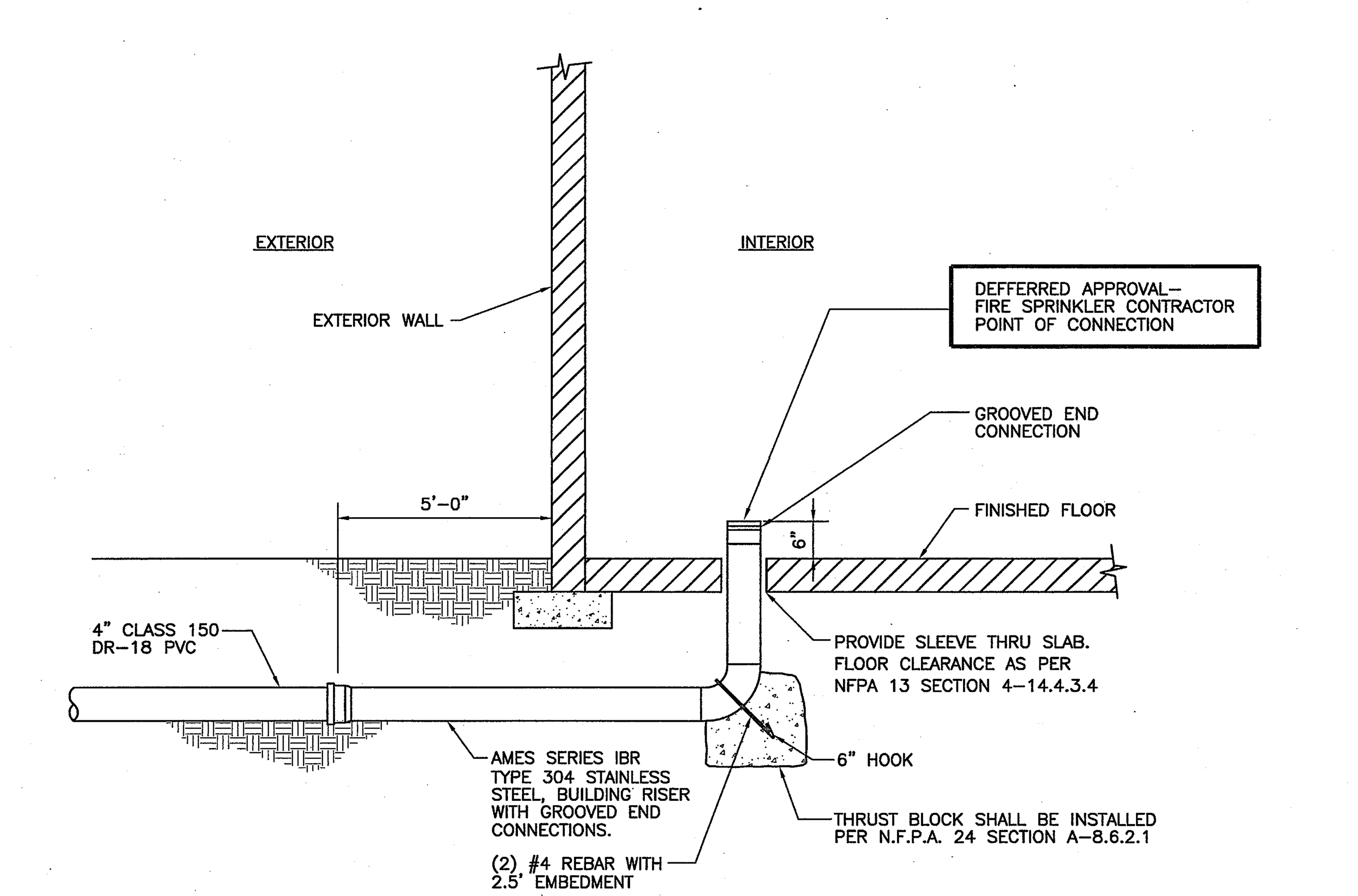

AUTOMATIC FIRE SPRINKLER RISER DETAIL

SCALE NONE 3

County of Orange
OC PUBLIC WORKS
Architecture & Engineering

Revisions
0742
Sym. | Descrip. | Date | By

Consultants
FTA F.T. Andrews, Inc. Consulting Engineers
A DIVISION OF AAIDS
17 PETERS CANYON ROAD, SUITE 150
IRVINE CA. 92606
TEL: 714-283-0341
FAX: 714-283-0348
Job Number: 28068
Drawn ___ Chkd. ___ Date 11-26-09

A-E Seal

A-E ALEXANDER + HIBBS, AIA, INC.
ALEXANDER + HIBBS, AIA, INC. Architecture and Planning
Design CC | Chkd. SA | Date Nov. 26, 2009

Sht Title PLUMBING DETAILS
Project COUNTY OF ORANGE HEALTH CARE AGENCY
401 SOUTH TUSTIN STREET
401 SOUTH TUSTIN STREET
ORANGE, CA 92866
PROJ. NO. 100-042-P210-4200

Plan No.
52333-03608

Sheet
P-4.1