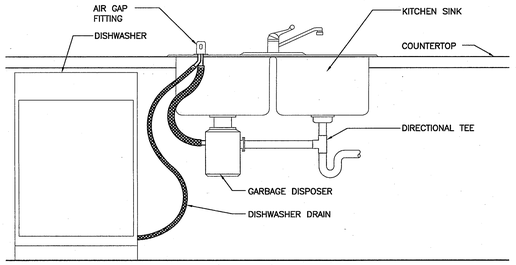

DISHWASHER HOOK-UP SHALL BE PER EQUIPMENT MANUFACTURER'S RECOMMENDATION.

DISHWASHER/AIRGAP FITTING DETAIL

SCALE NONE | 7

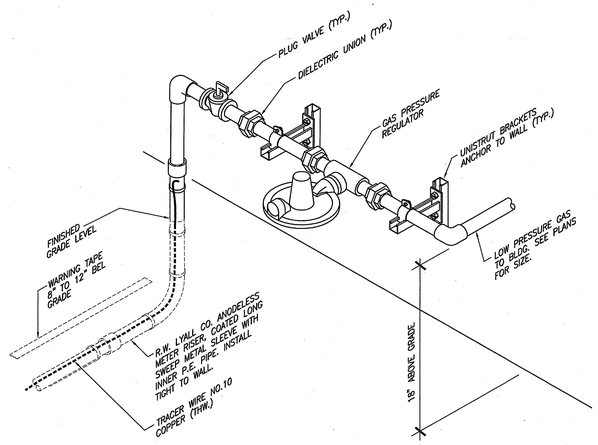

BUILDING GAS SERVICE DETAIL

SCALE NONE | 4

INSTALLATION NOTES:

1. MOUNT CHANNELS ON BLOCKING AS SHOWN BELOW.
2. INSTALL UPPER RESTRAINT 1/3 DOWN FROM TOP OF WATER HEATER AND LOWER RESTRAINT 4" ABOVE THE TOP OF CONTROLS.
3. INSTALL WATER HEATER TIGHT TO CHANNEL AND GUSSET ASSEMBLIES.

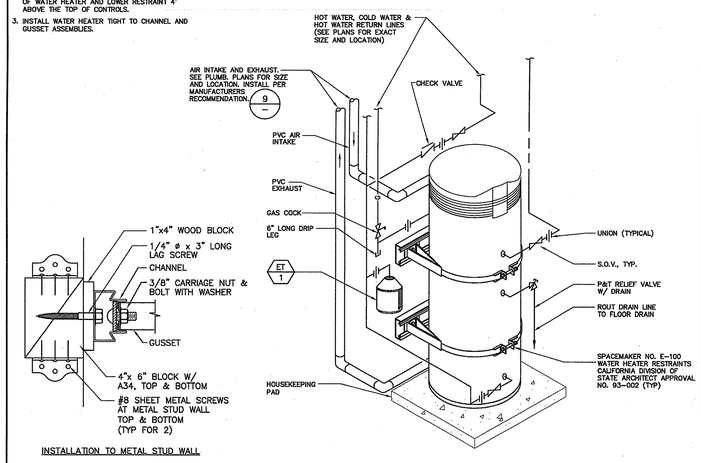

INSTALLATION TO METAL STUD WALL

WATER HEATER DETAIL

SCALE NONE | 1

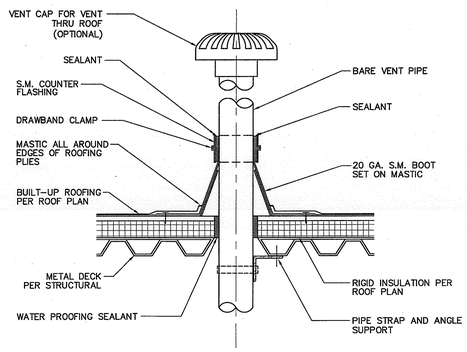

VENT THRU ROOF DETAIL

SCALE NONE | 8

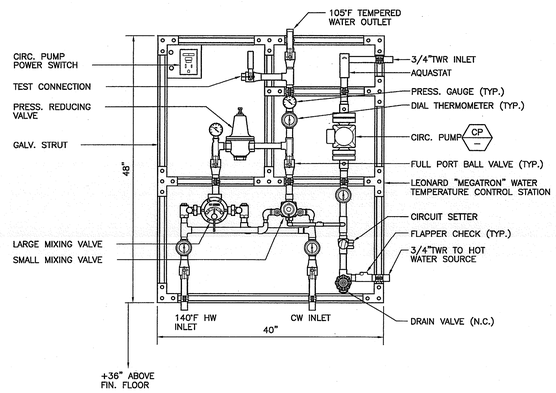

TYPICAL MIXING VALVE (MV-1) ASSEMBLY

SCALE NONE | 5

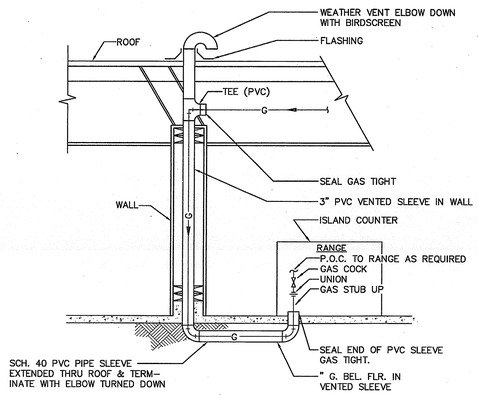

GAS PIPING BELOW FLOOR DETAIL

SCALE NONE | 2

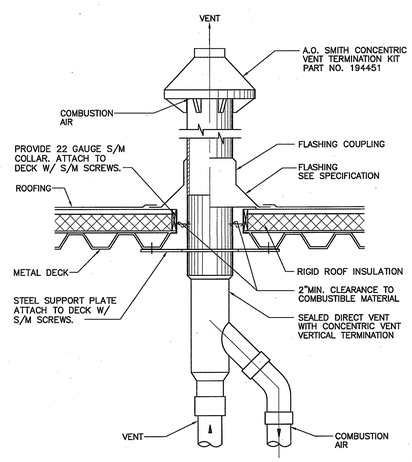

CONCENTRIC FLUE TERMINATION DETAIL

SCALE NONE | 9

Ⓐ DORMONT GAS APPLIANCE CONNECTION WITH (PVC COATING)		
SIZE	SERIES/LENGTH	BTU CAPACITY
3/8"	30 SERIES/2 FT.	80,000
1/2"	40 SERIES/2 FT.	150,000
3/4"	40 SERIES/2 FT.	290,000
1"	50 SERIES/2 FT.	581,000
1-1/4"	60 SERIES/2 FT.	1,075,000

NOTES:

1. ALL CONDENSATE DRAIN LINES WITHIN BUILDING SHALL BE INSULATED IN ACCORDANCE WITH THE REQUIREMENTS OF SECTION 15400, PLUMBING SPECIFICATIONS.
2. SEE DRAWING FOR SIZES.
3. TRAP DEPTH SHALL BE EQUAL TO THE A/C UNIT TOTAL STATIC PRESSURE PLUS 1-INCH BUT NOT LESS THAN 2-INCHES.

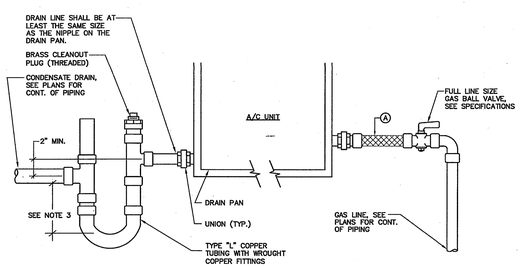

GAS AND CONDENSATE CONNECTION DETAIL

SCALE NONE | 6

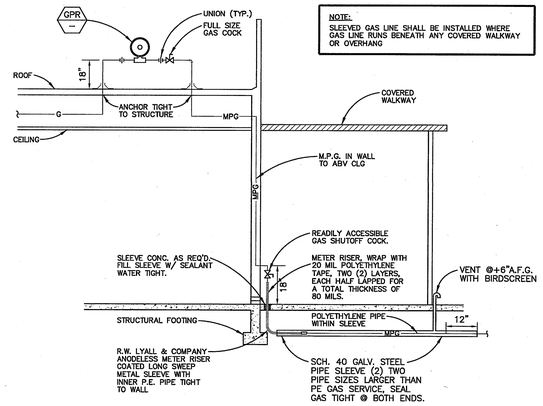

NOTE:
SLEEVED GAS LINE SHALL BE INSTALLED WHERE GAS LINE RUNS BENEATH ANY COVERED WALKWAY OR OVERHANG

BUILDING GAS SERVICE DETAIL

SCALE NONE | 3

County of Orange
OC PUBLIC WORKS
Architecture & Engineering

Revisions

Sym.	Descrip.	Date	By
0742			

Consultants

FTA Fullerton Engineering Associates, Inc.
Mechanical Electrical Plumbing
Fullerton, California 92835
Phone: 714-993-0641
Fax: 714-993-0641
Job Number 41-09

Drawn. Chkd. Date 11-26-09

A-E Seal

A-E ALEXANDER + HIBBS, AIA, INC.

ALEXANDER + HIBBS, AIA, INC.
Architecture and Planning
Irvine, California

Chkd. SA Date Nov. 26, 2009

Design CC

Sht Title PLUMBING DETAILS

Project COUNTY OF ORANGE HEALTH CARE AGENCY
401 SOUTH TUSTIN STREET
401 SOUTH TUSTIN STREET
ORANGE, CA 92866

PROJ. NO. 100-042-P210-4200

Plan No. 52333-03608

Sheet P-4.0

0742 COUNTY OF ORANGE HEALTH CARE AGENCY 401 SOUTH TUSTIN STREET