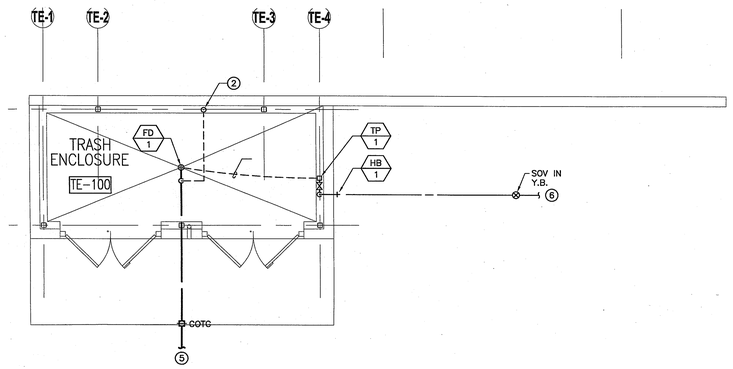

TRASH ENCLOSURE - PLUMBING PLAN | SCALE: 1/4"=1'-0" | 3

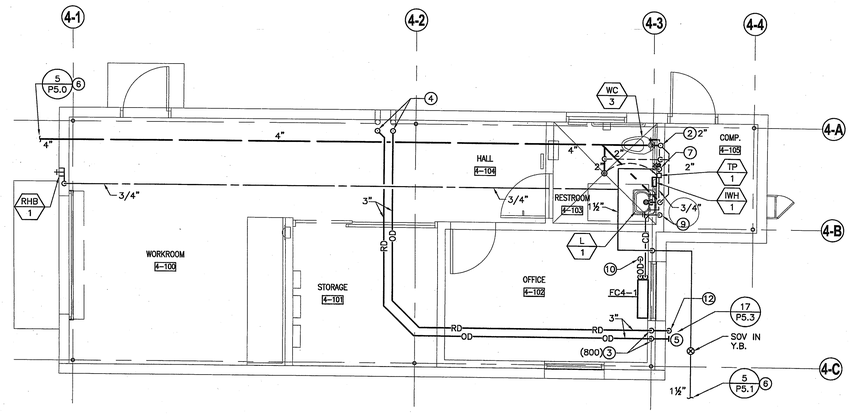

BUILDING 4 - PLUMBING FLOOR PLAN | SCALE: 1/4"=1'-0" | 1

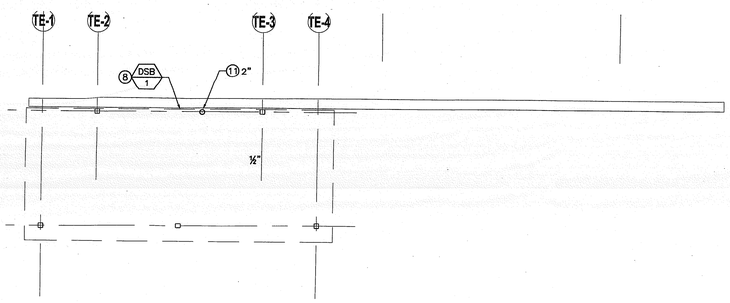

TRASH ENCLOSURE - PLUMBING ROOF PLAN | SCALE: 1/4"=1'-0" | 4

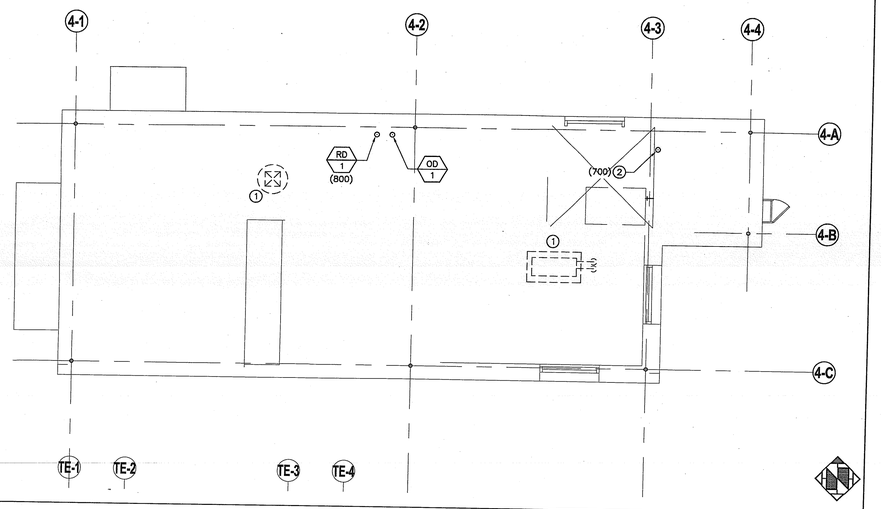

BUILDING 4 - PLUMBING ROOF PLAN | SCALE: 1/4"=1'-0" | 2

CONSTRUCTION NOTES

1. MECHANICAL EQUIPMENT SHOWN FOR REFERENCE ONLY. REFER TO MECHANICAL PLANS FOR ADDITIONAL INFORMATION.
2. VENT THRU ROOF.
3. 3"ø ROOF AND OVER FLOW DRAIN DOWN TO BELOW.
4. 3"ø ROOF AND OVER FLOW DRAIN DOWN FROM ABV.
5. 3"ø OVER FLOW DRAIN TO DAYLIGHT ±8" ABOVE FINISHED GRADE.
6. REFER TO PLUMBING SITE PLAN ON SHEET P-1.1 FOR CONTINUATION OF LINE.
7. 1½"CW DN. IN WALL TO COLD WATER HEADER WITH SHUT-OFF VALVE WITH ACCESS PANEL AND WATER HAMMER ARRESTOR.
8. 3"ø SHEET METAL DOWN SPOUT TO DAYLIGHT 6" ABOVE SPLASH BLOCK.
9. ¾" CONDENSATE DRAIN DN. IN WALL TO LAV. TAILPIECE. (5 / P4.1)
10. ¾" OVERFLOW TO SPILL ABV. WINDOW.
11. 2" VENT +10'-0" A.F.G.
12. SPILL 3"ø ROOF DRAIN THRU EXTERIOR WALL AND ELBOW DOWN AT ±8" ABOVE FINISHED GRADE TO SPLASH BLOCK.

KEY PLAN

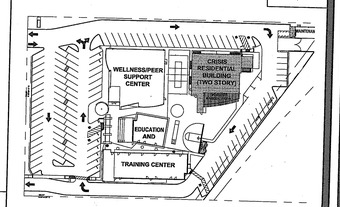

County of Orange
OC PUBLIC WORKS
Architecture & Engineering

Revisions

Sym.	Descrip.	Date	By

0742

Consultants

FTA ARCHITECTS
ALEXANDER + HIBBS, AIA, INC.
1000 WEST MAPLE STREET, SUITE 160
SAN DIEGO, CA 92103
TEL: 619-295-0544
FAX: 619-295-0545
Job Number: 08006

Drawn | Chkd. | 11-26-09 Date

A-E Seal

A-E ALEXANDER + HIBBS, AIA, INC.

ALEXANDER + HIBBS, AIA, INC.
Architecture Interior Design Planning
1000 W. Maple, Suite 160
San Diego, CA 92103

Design CC | Chkd. SA | Date Nov. 26, 2009

Sht Title BUILDING 4 AND TRASH ENCLOSURE PLANS
Project COUNTY OF ORANGE HEALTH CARE AGENCY
401 SOUTH TUSTIN STREET
401 SOUTH TUSTIN STREET
ORANGE, CA 92866
PROJ. NO. 100-042-P210-4200

Plan No.
52333-03608

Sheet
P-2.4.1

0742 COUNTY OF ORANGE HEALTH CARE AGENCY 401 SOUTH TUSTIN STREET